Mid Term Workshop, Belfort 12/12/2017

“Fuel Cell Systems for FCE buses”

Bosch Engineering GmbH

Harald Fischer
Harald.Fischer@de.bosch.com
+49(7062)911-6570

Peter Eckert
Peter.Eckert2@de.bosch.com
+49(7062)911-7361

BOSCH
Technik fürs Leben
Bosch Engineering

GIANTLEAP

Agenda

- Bosch Engineering Overview
- Fuel Cell Control Unit
- Project Giantleap
- Further Bosch Engineering Fuel Cell Range Extender projects

Bosch Engineering

Development partner

for customized mobility solutions

BOSCH

Bosch Engineering
Locations

Abstatt | Holzkirchen | Weissach | Ingolstadt | Braunschweig

Farmington Hills | Palo Alto

Coventry

Turin

Shanghai | Suzhou

Curitiba | Campinas

Paris (Saint Ouen)

Wien

Yokohama

Fuel Cell Engineering Services

- **System design:** requirements management, topology definition, sizing of fuel cell/ battery/ hydrogen tank capacity
- **Simulation:** use case analysis, load profiles
- **Selection of components:** component specification and benchmarking of suppliers
- **Control software:** development of operating strategy and implementation on BEG fuel cell control unit (FCCU)
- **Functional safety:** Consideration of relevant safety aspects and standards
- **System testing:** subsystem/ system testing and validation on BEG test benches
- **Vehicle integration:** packaging, construction, installation and commissioning

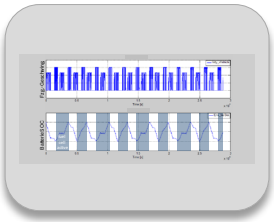

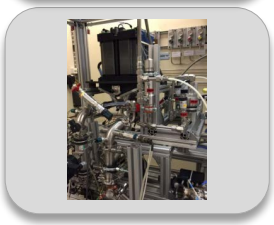

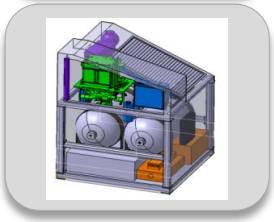

GIANTLEAP

Agenda

- Bosch Engineering Overview
- Fuel Cell Control Unit
  - Overview
  - The System
  - Platform Software Benefits
- Project Giantleap
- Further Bosch Engineering Fuel Cell Range Extender projects

Fuel Cell Control Unit

- A wide range of analog and digital interfaces enable flexible integration into a fuel cell system
- The Fuel Cell Control Unit is characterized by its robust design
- The FCCU meets the international functional safety standard. Safety-relevant functions are monitored via redundant software levels. Diagnostics and maintenance can be carried out remotely via the usual wireless interfaces.
- The FCCU guarantees safe operation in all circumstances and offers sophisticated fail-safe strategies
- Using established calibration methods, tolerances can be compensated without software changes.

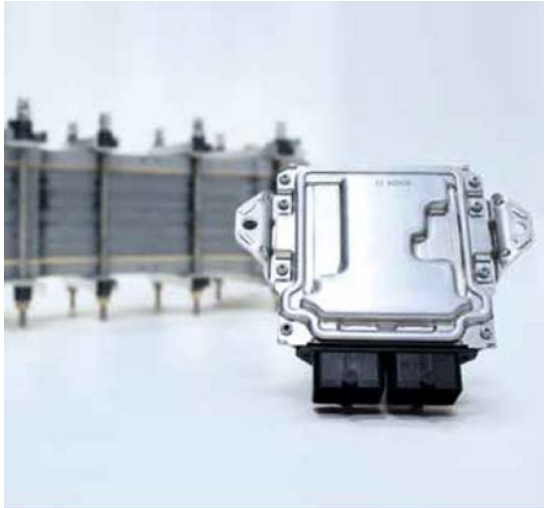

Customer benefits

- Hydrogen, air and coolant control
- Analog and digital interfaces
- EMC-safe
- Automotive series-production quality
- Functional safety (ISO 26262)
- Remote maintenance and diagnostics via Bluetooth and GSM
- Individual calibration for your application

Fuel Cell Control Unit – The System

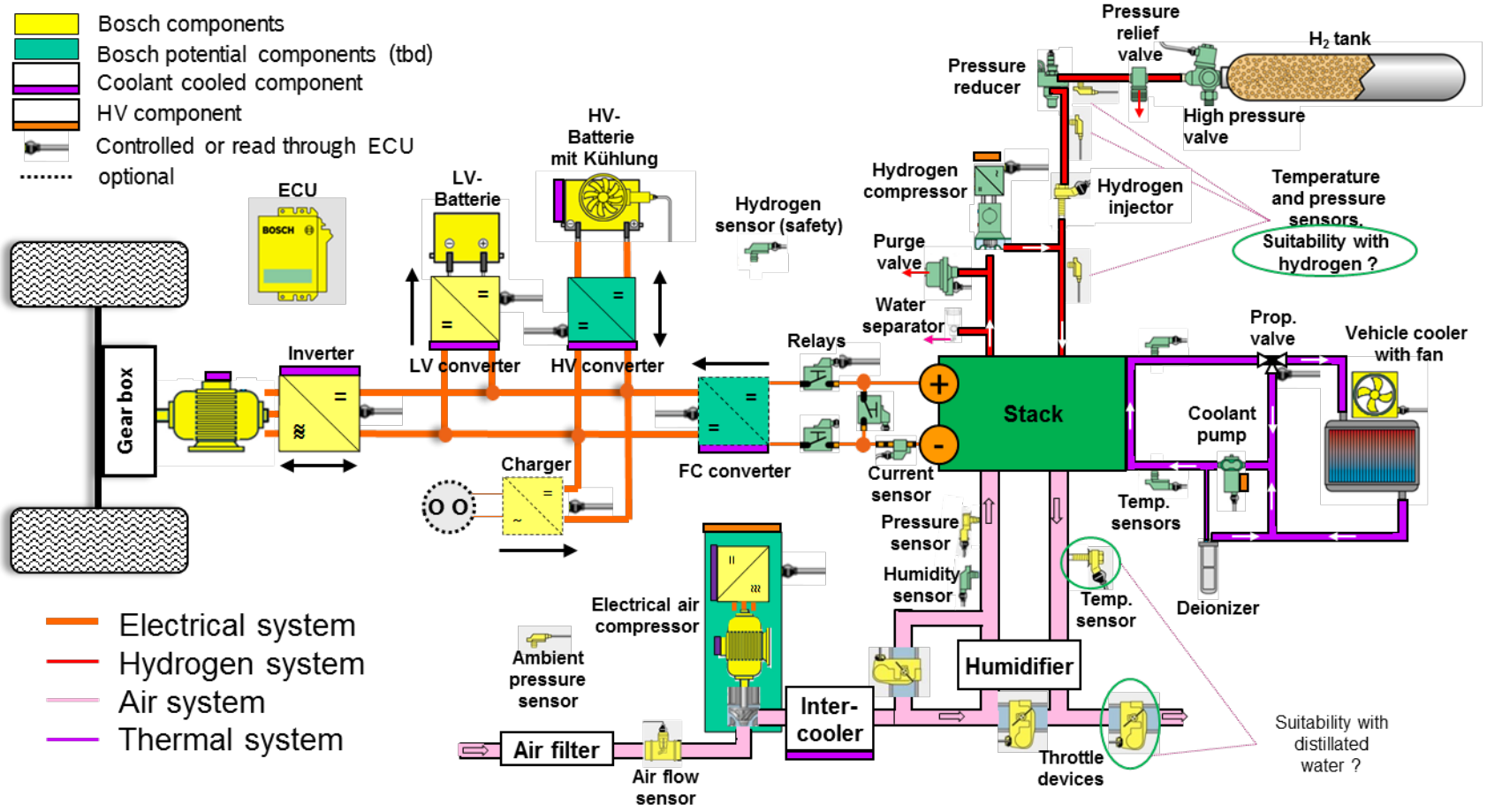

Fuel Cell Control Unit - Platform Software Benefits

EG79/2009

- Safety of hydrogen-bearing Parts

ISO26262

- Road vehicles – Functional safety

ISO 13849

- Safety of machinery - Safety-related parts of control systems

DIN EN 62282-4

- Fuel Cell Power Systems For Propulsion Other Than Road Vehicles And Auxiliary Power Units - Fuel Cell Power Systems For Industrial Electrically Driven Forklift Trucks - Safety

GIANTLEAP

Fuel Cell Control Unit - Platform Software Benefits

Operational
operation strategy, hydrogen, air and thermal control available

Adaptable
adapt the SW to your system demands without changing code

Diagnoseable
define error behaviour, find failure root cause in service station

Safety oriented
redundant ECU HW and SW check to fulfill safety requirements

Future proof
customer specific Add On‘s and future requirements can be realised

Agenda

- Bosch Engineering Overview
- Fuel Cell Control Unit
- Project Giantleap
  - Project Organization
  - Project Objectives
  - Fuel Cell System Overview
- Further Bosch Engineering Fuel Cell Range Extender projects

Giantleap Project Organization

▸ Fuel Cells and Hydrogen Joint Undertaking (FCH-JU)	Belgium	Lead Partner
▸ Stiftelsen SINTEF (SINTEF)	Norway	Project Organization
▸ Sveuciliste u Splitu – Fakultet Elektrotehnike, Strojarstva i Brodogranje (FESB)	Croatia	Degradation mechanisms
▸ Universite de Franchecompte (UFC)	France	Lifetime prognostics
▸ BOSCH Engineering GmbH (BEG)	Germany	System development
▸ Elring Klinger AG (EK)	Germany	Stack manufacturer
▸ VDL Bus & Coach BV (VDL)	Netherlands	Bus manufacturer

Bosch Engineering

Giantleap Project Objective

- Design and build of a fuel cell range extender system for battery electric city buses
- Reduction of system cost by use of production components
  - Aim: System cost < 500 €/kW for the FC system
  - TCO for a FC-REx city bus within the range of a Diesel powered bus
- Increase of lifetime and availability of the fuel cell system
- Development of algorithms for modelling remaining lifetime
  - State of Health und diagnostic functions
  - Prediction of remaining useful life
  - Operation and control strategy optimized für maximum lifetime

Fuel Cell Range-Extender for Intercity bus

- Electrified bus with a rated power of 210-240 kW, lithium-ion battery with a usable capacity of 60-120 kWh and rated voltage of 700 V
- PEM fuel cell system providing 60 kW net power in range-extender mode
- Tank capacity of 32 kg hydrogen (diesel energy equivalent of 108 l) with a tank pressure of 350 bar. Maximum driving range of 450 km.
- Suitable system for low ambient temperatures during winter

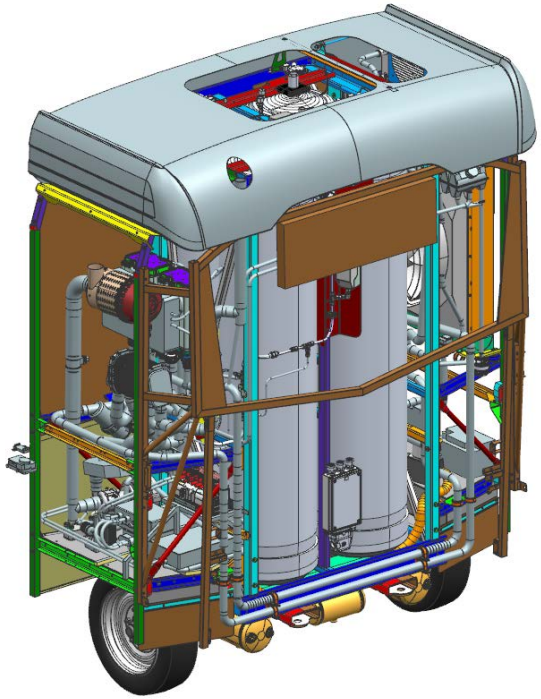

Fuel Cell Power Train Topology

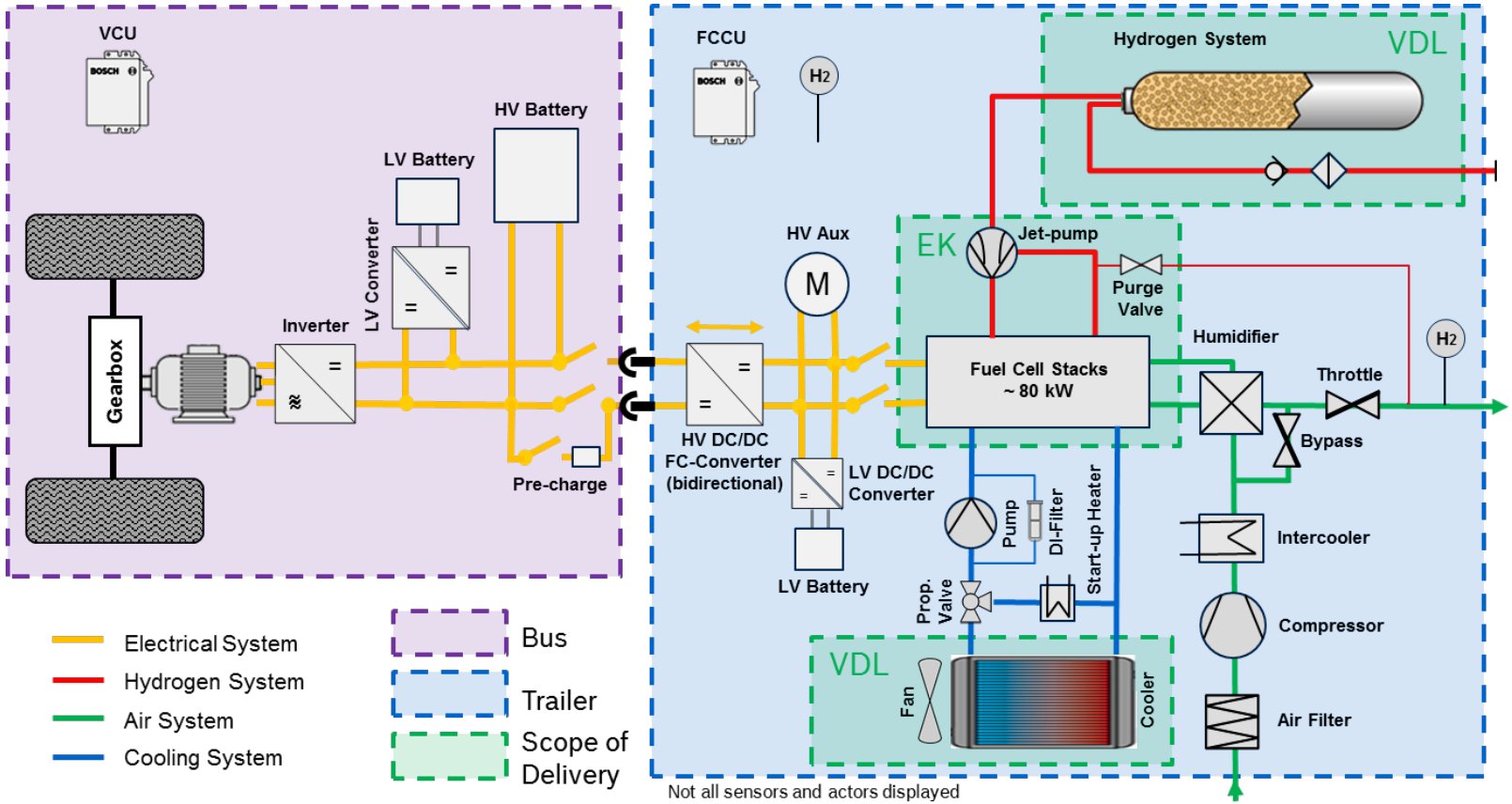

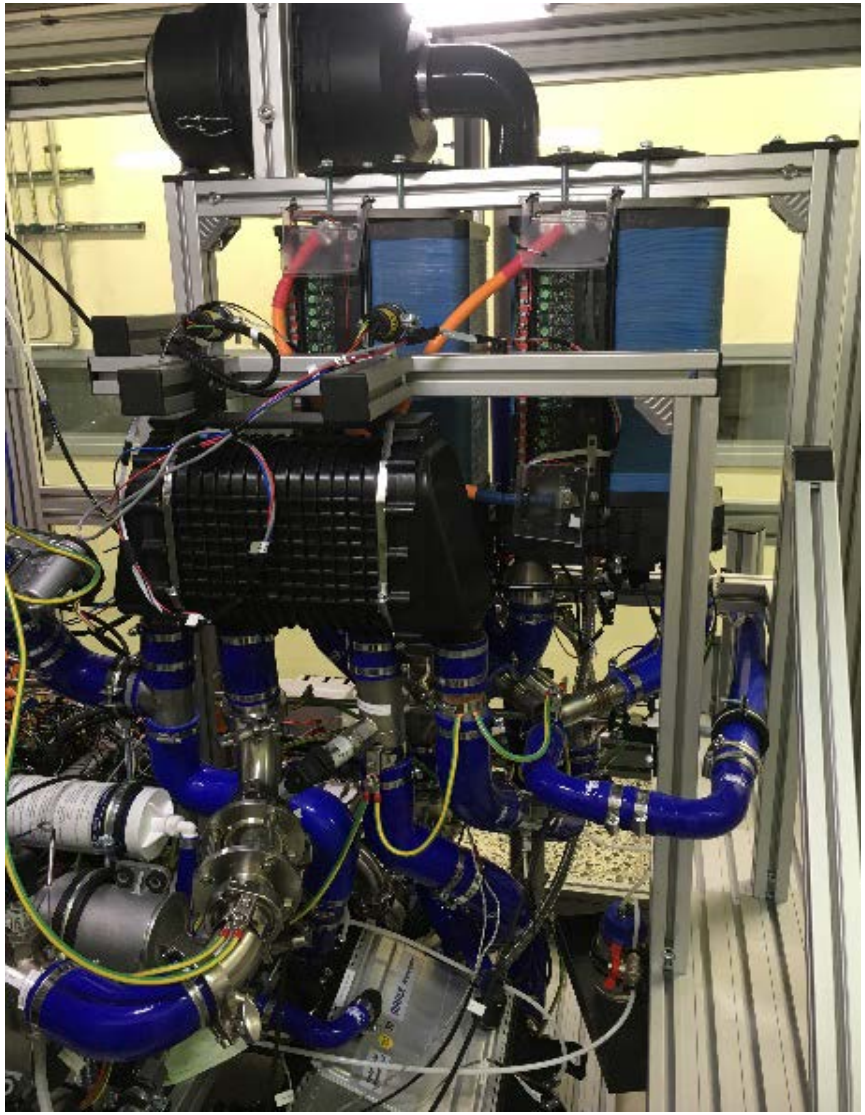

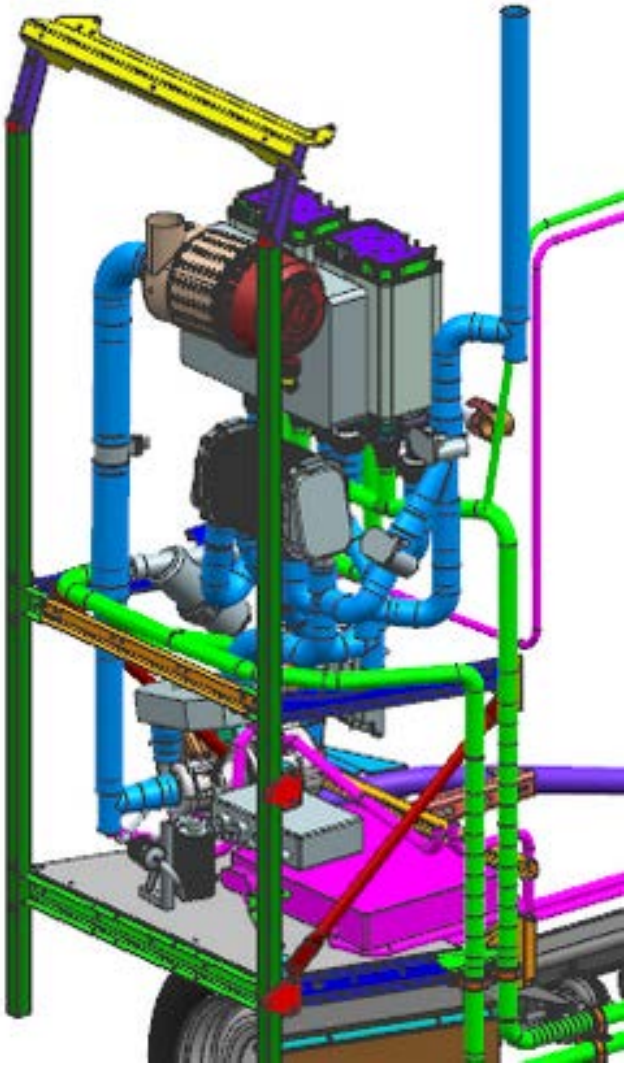

Agenda

- Bosch Engineering Overview
- Fuel Cell Control Unit
- Project Giantleap
- Further Bosch Engineering Fuel Cell Range Extender projects

Project InnoROBE

- Fuel cell range extender airport baggage tow truck
- Project founded by German government (NOW)
- Development of fuel cell system by Bosch Engineering GmbH
- First demonstrator project done within Bosch Group

Technical Data	
Load Capacity	-
Vehicle Speed	50 km/h
Powertrain	30 kW
Battery	6 kWh @ 80 V
Fuel Cell System	15 kW net power
Total Range	8 hours airport transport

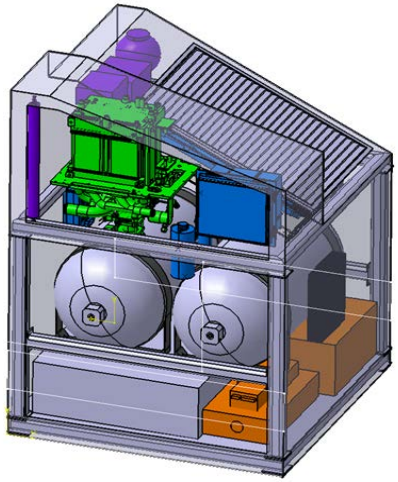

Project Bosch eCityBus Demonstrator Vehicle

- Fuel cell range extender midi bus based on Iveco Daily Tourys
- Bosch FCCU platform (software and hardware)
- Powertrain with Bosch SMG Gen2 electric motor
- Bosch VCU platform (software and hardware)

Technical Data	
Load Capacity	22 pasengers
Vehicle Speed	105 km/h (limited)
Powertrain	130 kW electric motor
Battery	53 kWh @ 400 V
Fuel Cell System	40 kW net power
Total Range	max. 580 km

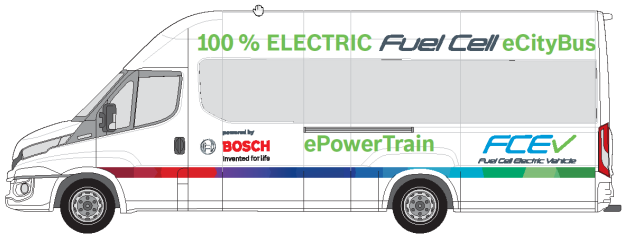

Nikola Motor, Type One and Two

- Fuel cell range extender class 8 heavy truck for US market
- Co-operation between Nikola Motor Corp. and Robert Bosch GmbH
- Development of powertrain by Robert Bosch GmbH
- Development of fuel cell system by Bosch Engineering GmbH

Technical Data	
Load Capacity	65,000 lbs payload
Vehicle Speed	70 mph
Powertrain	1,000 bhp
Battery	320 kWh @ 800 V
Fuel Cell System	300 kW net power
Total Range	max. 1,000 mls

GIANTLEAP

Giantleap Improves Automation of Non-polluting Transportation with Lifetime Extension of Automotive PEM fuel cells

This project has received funding from the Fuel Cells and Hydrogen 2 Joint Undertaking under grant agreement № 700101. This Joint Undertaking receives support from the European Union's Horizon 2020 research and innovation programme and Hydrogen Europe and N.ERGHY.

FCH

FUEL CELLS AND HYDROGEN JOINT UNDERTAKING