GIANTLEAP

DELIVERABLE D2.3

**PUBLIC**

# *Experimental validation of the prognostic algorithm for the PEM fuel cell system*

Abdelkader Haidar Detti, Raffaele Petrone (UFC)

*Quality Assurance: Ivan Pivac (FESB)*

| | |
|---|---|
| **Project acronym:** | GIANTLEAP |
| **Project title:** | Giantleap Improves Automation of Non-polluting Transportation with Lifetime Extension of Automotive PEM fuel cells |
| **Project number:** | 700101 |
| **Document date:** | December 02, 2019 |
| **Due date:** | October 31, 2019 |
| **Keywords:** | Prognostic software, FC system |
| **Abstract:** | This deliverable presents the algorithm developed for the online implementation, which aims to predict the fuel cell lifetime. The algorithm was developed in such a way to be fast and simple to implement. The fuel cell model has been calibrated on selected data from testing at BEG and validated on selected data from trailer testing at VDL. Finally, a monitoring strategy, based on the available data, has been developed to preserve the fuel cell system of a premature degradation (presented as diagnostic part in this deliverable). |

## Revision History

| Date | Description | Author |
|---|---|---|
| October 29th, 2019 | First version | Abdelkader DETTI, UFC |
| October 31st, 2019 | Comments and revisions | Samir JEMEI, UFC |
| November 4th, 2019 | Second version | Abdelkader DETTI, UFC |
| November 4th, 2019 | Comments and revision | Daniel Hissel, UFC |
| November 6th, 2019 | Third version | Abdelkader DETTI, UFC |
| November 6th, 2019 | 2nd revision | Daniel Hissel, UFC |
| November 29th, 2019 | Validation | Nadia Steiner, UFC |
| December 2nd, 2019 | Final layout corrections | Federico Zenith, SINTEF |

# Table of Contents


1 Introduction ..... 4

2 Prognostic Software description ..... 5

2.1 Global Software structure ..... 5

2.2 FC stack model ..... 6

2.3 Air line Model ..... 7

2.4 The cooling system Model ..... 8

2.5 H2 line Model ..... 9

3 Software Validation ..... 9

3.1 Online implementation ..... 9

3.1.1 Estimation of the RUL (Part I) ..... 9

3.1.2 Ancillaries diagnosis (PART II) ..... 12

4 Conclusions ..... 14

# 1 Introduction

GIANTLEAP aims to integrate a fuel cell (FC) system in a city bus, developing a fuel-cell range extender to support electric buses' batteries (B) on load demand. To evaluate the ageing of both the FC stack and the system balance of plant (BoP), a model-based prognostic approach has been developed and extensively presented in deliverable D2.2. Figure 1 and Figure 2 represent the concept of the real system that will be modeled. They are reported to clarify the structure of the developed software; more details about the model results are reported in deliverables D2.1 and D2.2. The prognostic model is developed using the Energetic Macroscopic Representation (EMR) tool. More detail about this tool could be found in D2.2.

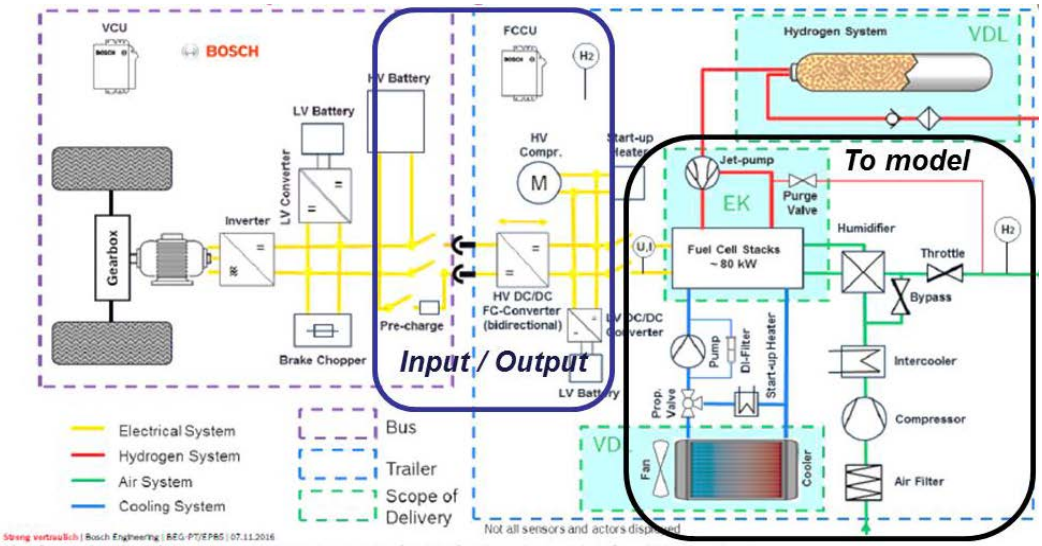


*Figure 1: FC range extender, concept proposed by BEG.*

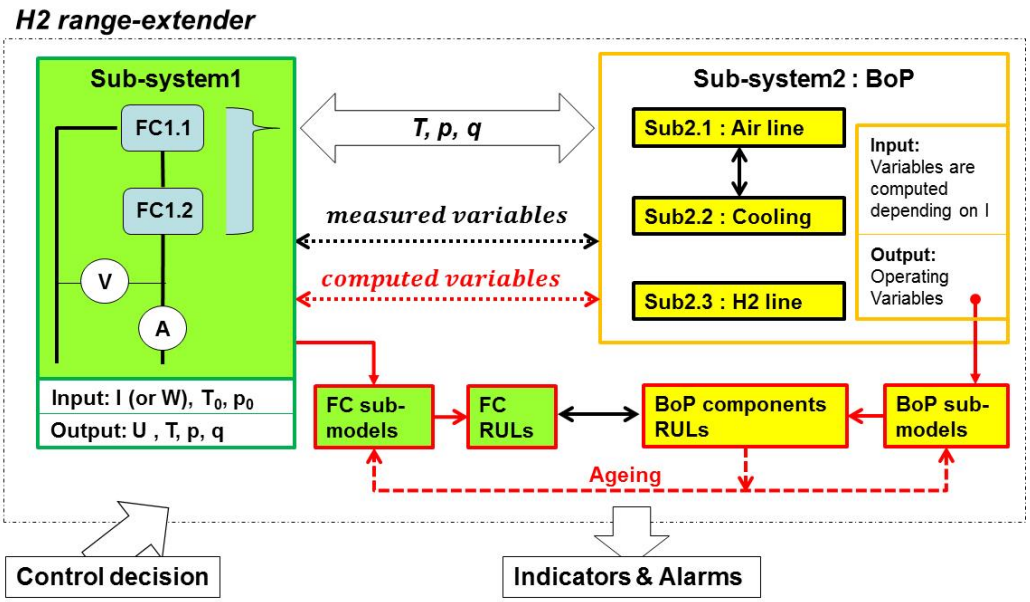


*Figure 2: FC range extender scheme for the prognostic software development.*

# 2 Prognostic Software description

## 2.1 Global Software structure

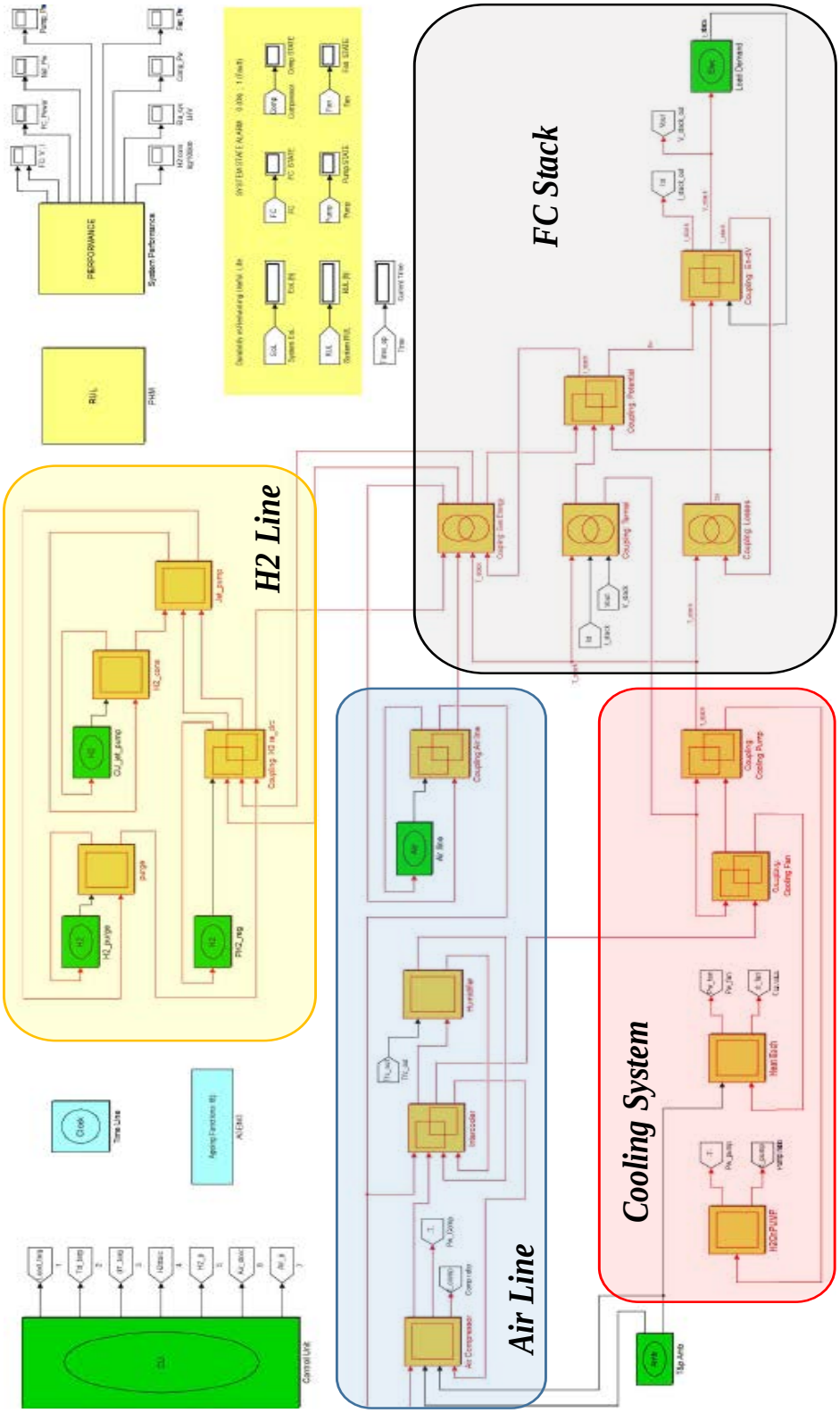


*Figure 3: General Prognostic Software Structure.*

Figure 3 shows the global prognostic software structure (individual blocks details are in D2.2):

- The Control Unit (CU) sends to the model the simulation target values (CU green block).
- The clock block sets the time for simulation and evaluates the operational time of the real system (clock light blue block).
- The ageing block evaluates the evolution of ageing parameters with the simulation time, also named ageing functions (ageing light blue block).
- The results blocks (yellow blocks) contain the remaining useful life (RUL) evaluation block, the performance plot block and the section displaying the prognostic results.
- The EMR model, divided in four sub-models: the load demand converter from power to current, the FC stack, the reactants ($H_2$ and air) circuits and the cooling system.

## 2.2 FC stack model

The current demand, the reactants pressures and the operating temperature are the inputs of the FC sub-system. Figure 4 represents the generic FC stack model.

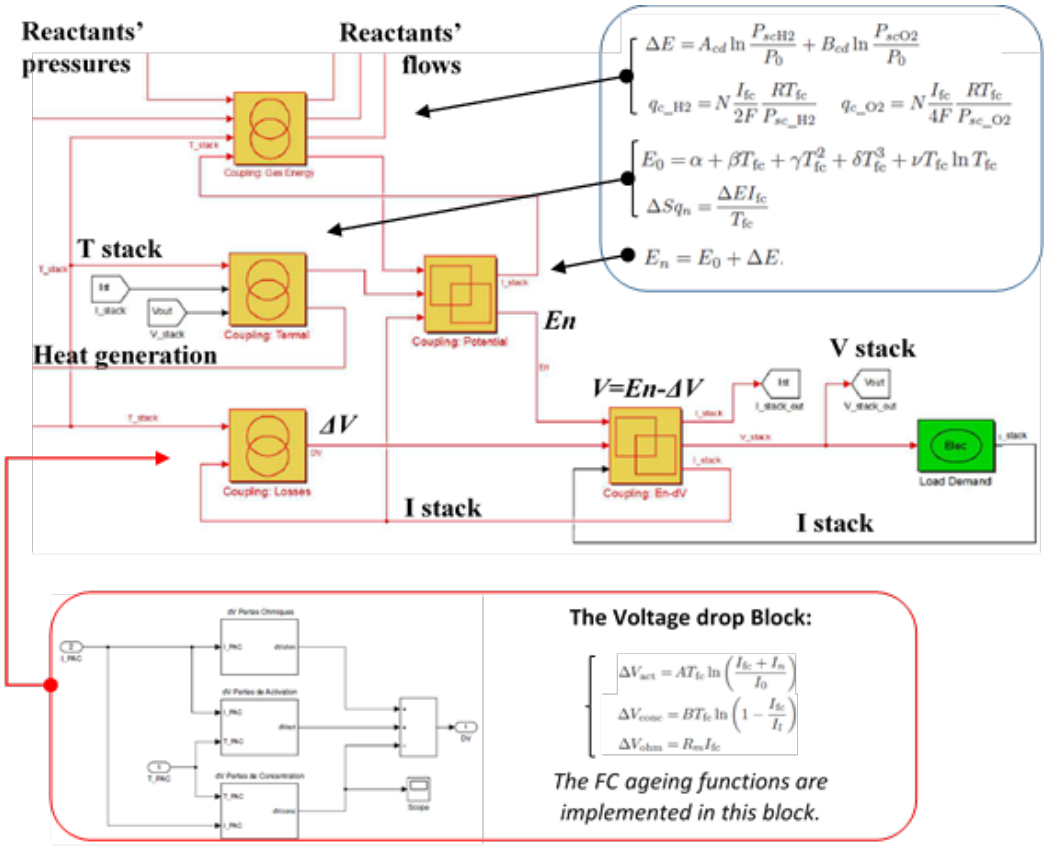


*Figure 4: Modelling of the FC stack.*

- Reactant pressures and stack temperature are used to evaluate the Nernst potential.
- Current demand is used to evaluate both reactants flows and heat generation.
- The FC voltage is evaluated as the difference between the Nernst potential and the FC losses, $V_{FC} = En - \Delta V$.
- The different voltage drops due to activation, ohmic and diffusion losses are evaluated.
- Ageing evaluation is achieved integrating the ageing functions through the ageing block.

## 2.3 Air line Model

Figure 5 shows the air line sub-model.

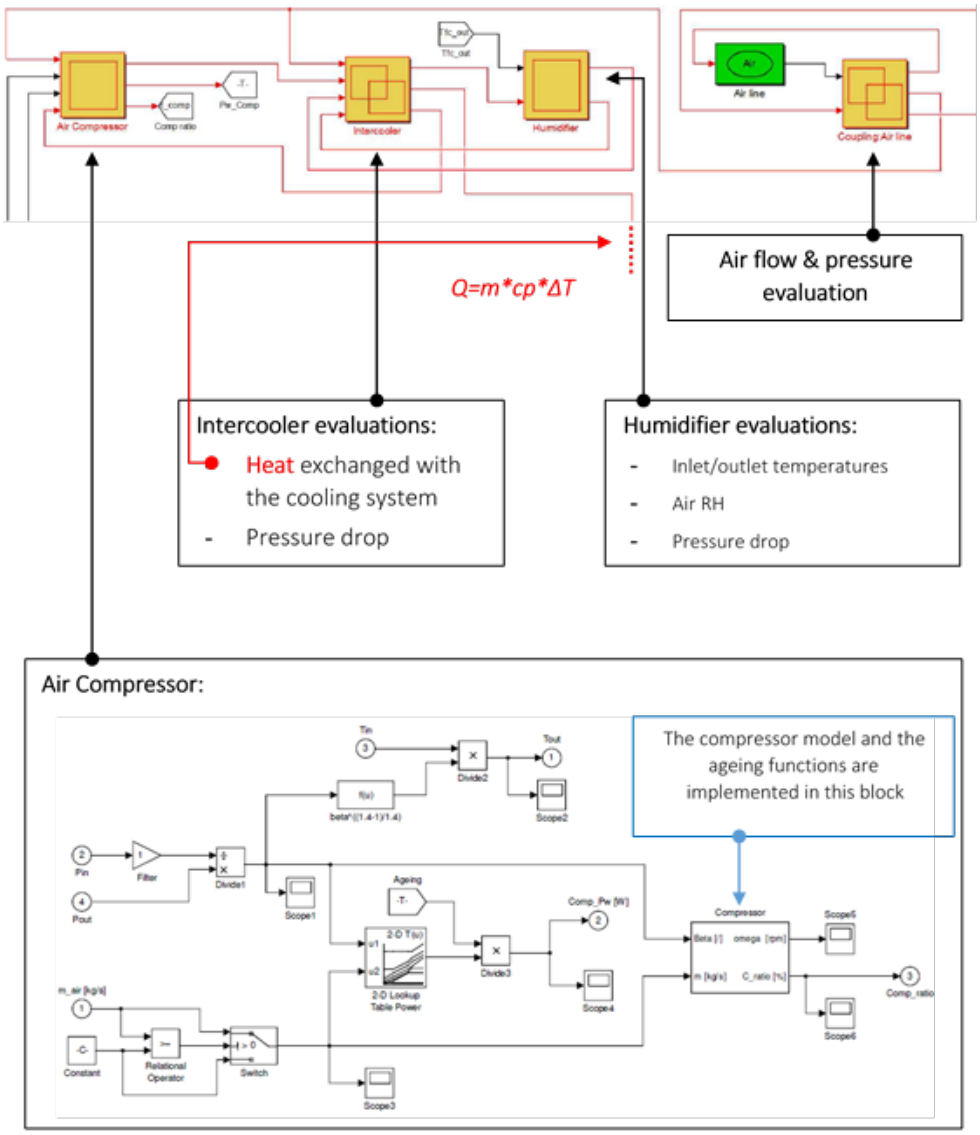


*Figure 5: The blocks modelling the air line.*

- The *coupling air block* combines the air pressure and mass flow values required for the FC operation, and the air line ancillaries operations. This block represents the interface between the FC sub-model and the air line sub-model.
- The *humidifier block* evaluates the inlet air pressure drop and relative humidity, and the heat exchanged into the humidifier.
- The *intercooler block* models the air pressure drop due to the heat exchanger and evaluates the heat exchanged between the air line and the cooling system.
- The *air compressor block* models the compressor operations, evaluating the compressor speed and power, the compression factor and the outlet temperature.
- To evaluate the ageing, the compressor ageing parameter (compressor speed as evaluated in the *ageing block*), is integrated in this block.

## 2.4 The cooling system Model

Figure 6 shows the cooling system sub-model.

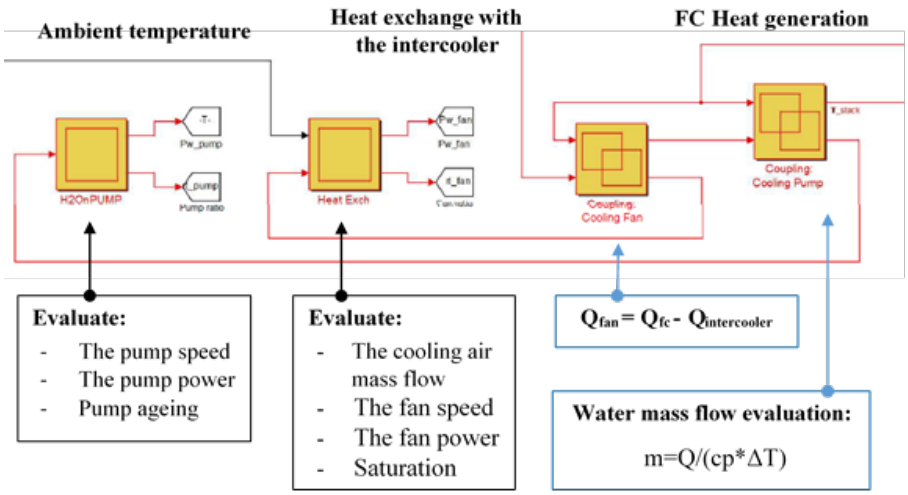


*Figure 6: The blocks modelling the cooling system.*

The *coupling pump block* combines the FC heat generation with water mass flow and the cooling system. This block represents the first interface between the FC sub-model and the cooling system sub-model and aims to provide the pump model input.

- The *coupling cooling fan block* evaluates the heat exchanged. This block represents the second interface between the FC sub-model and the cooling system sub-model aimed to provide the heat exchanger model input.
- The *heat exchanger block* contains the fan model. The cooling air mass flow is evaluated and the fan speed and power calculated. The fan performance is evaluated and sent to the RUL block. It is worth noting that, no ageing is scheduled for the fan operations. However, its performance tracked in order to avoid saturation operating conditions (100% of its operation). In this case, a problem on the cooling system can be detected and maintenance suggested.
- The pump block models the pump operations, evaluating the pump speed and power.
- To evaluate the ageing phenomena, the pump ageing parameter (pump speed as evaluated in the ageing block), is integrated in this block.

## 2.5 H2 line Model

Figure 7 shows the hydrogen recirculation model.

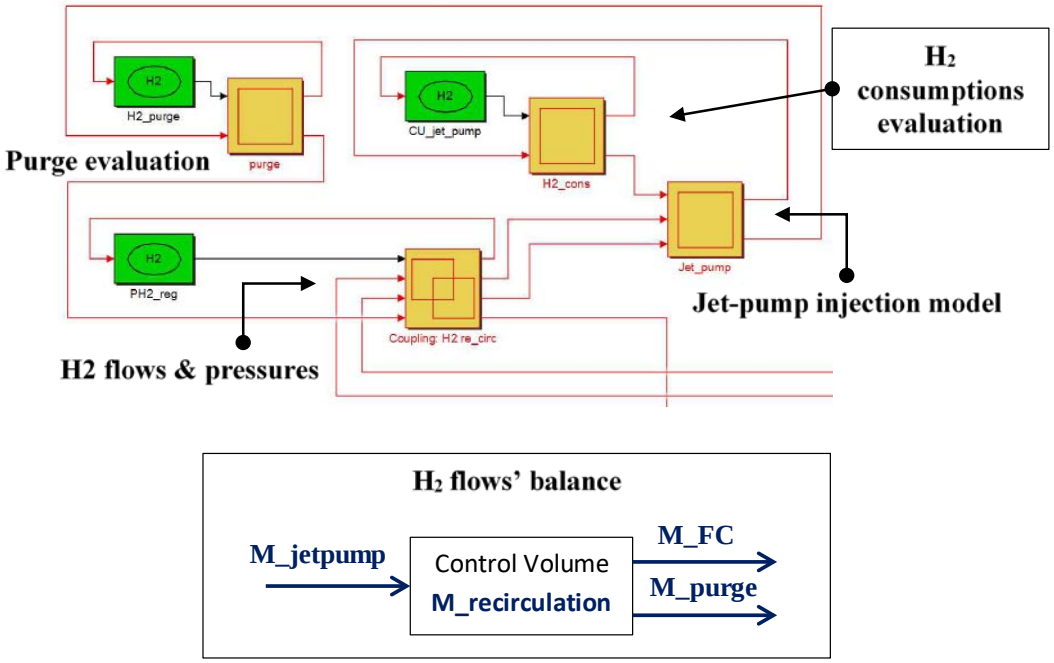


*Figure 7: The blocks modelling the hydrogen recirculation.*

- The *coupling $H_2$ recirculation block* combines the hydrogen pressure and mass flow values required for the FC functioning, and the $H_2$ line ancillaries operations. This block represents the interface between the FC sub-model and the $H_2$ line sub-model.
- A hydrogen mass flows' balance is obtained by considering the inlet flow filled by the jet-pump and the outlet flows represented by the hydrogen consumed during the FC operation and the one expelled during the anode purging.
- The *consumption block evaluates* the hydrogen consumption as the cumulated mass injected by the jet-pump during the system operations.

# 3 Software Validation

## 3.1 Online implementation

The objective of this part is to develop the algorithm to be implemented online which aims to estimate the Remaining Useful Life (RUL) of the fuel cell stack, under given operating conditions. The developed code contains two main parts, the first one deals with the estimation of the fuel cell lifetime, the second one aims to monitor and set up alarms linked to critical operating conditions of the ancillaries that can damage the fuel cell stack.

### 3.1.1 Estimation of the RUL (Part I)

The developed model is valid for all fuel cells. However, each fuel cell has its own internal characteristics and parameters. In order to calibrate the developed model on the tested fuel cell, three parameters must be identified: the internal resistance, internal current and cross

over current densities. These parameters are identified using the available polarization curves and an optimization algorithm. For this purpose, the Matlab function '*lsqcurvefit*', which solves nonlinear curve-fitting problems in least squares sense, is used to identify these parameters.

The parameters identification was performed offline in order to reduce the computing time, which is a key criterion of the online implementation of the algorithm. In order to validate the calibration of the model, simulated polarization curves, using the identified parameters, are compared to the experimental ones. The validation has been computed on the available polarization curves, five of them are represented on Figure 8.

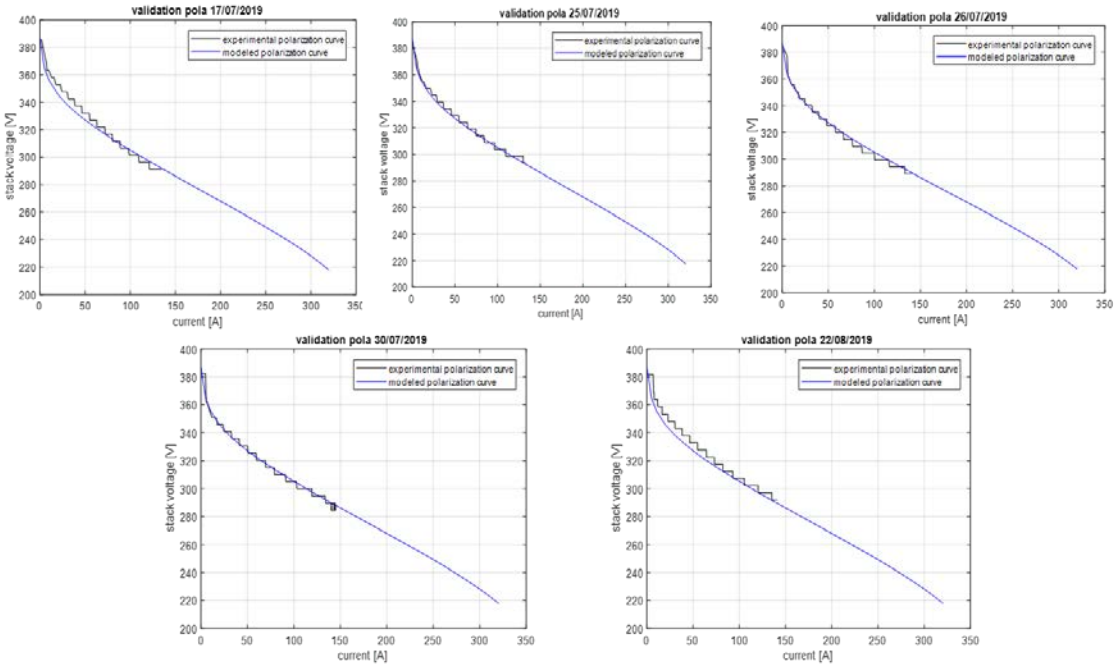


*Figure 8: Model calibration on polarization curves.*

The identified parameters are used in the aging fuel cell model presented in Section 2 to predict the aged voltage. Each ageing parameter is defined as follows:

$$\text{ageing parameter} = \text{identified parameter} \times \exp\left(b \times \frac{T_e}{\tau}\right) \quad (1)$$

Where:

b: fitting parameter,

$T_e$: defined end of lifetime,

$\tau$: ageing law parameter.

The prognosis model, Figure 9, developed using the Energetic Macroscopic Representation tool in Matlab/Simulink and presented in deliverable 2.2, is too complex and time consuming for an online implementation. Based on that, a simplification of this model is necessary to easily, quickly and accurately, estimate the RUL.

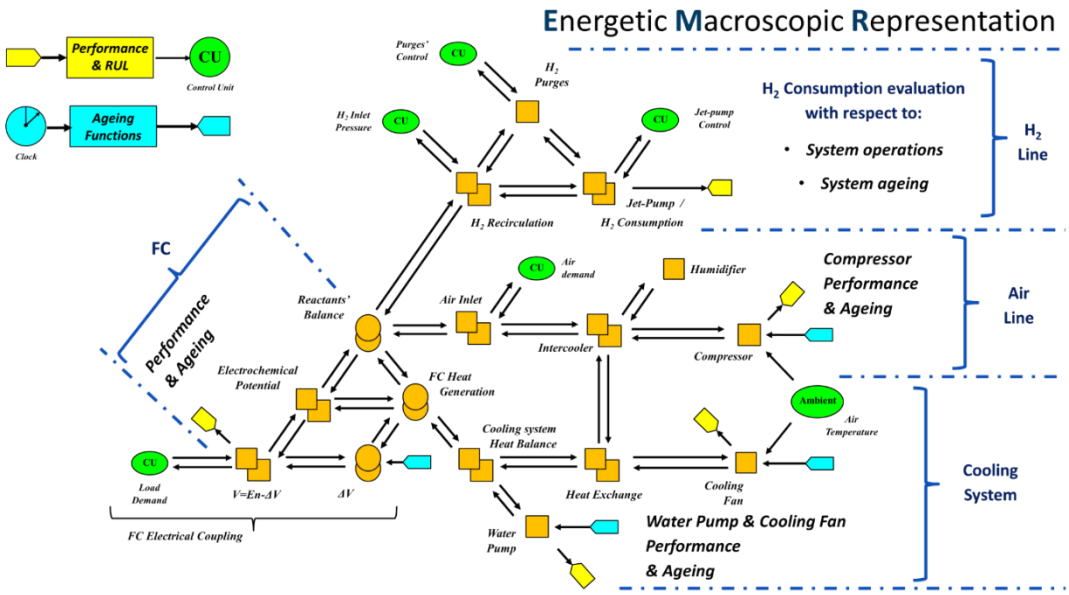


*Figure 9: Fuel cell system ageing model.*

Therefore, to estimate the RUL of the fuel cell, a so-called damage function has to be computed according to the following equation:

$$\boldsymbol{D(t)} = \frac{\boldsymbol{p^N - p(t)}}{\boldsymbol{p^N - p^c}} \tag{2}$$

where $p^N$ is the nominal performance (BoL), $p^C$ is the critical performance (EoL) and p(t) is the performance at the damage calculation time.

The nominal performance is computed using the identified stack parameters and the fuel cell model presented in deliverable 2.2. The critical performance is also computed using the same fuel cell model but using the ageing parameters (see eq. 1).

The available data is not sufficient, in terms of operational time, to validate the prognosis of the RUL. Indeed, any performance degradation, due to the ageing, can be seen on the voltage through no more than 30 operating hours (according to the used data). However, to validate the model, a performance degradation is simulated by setting an operational time and a degraded voltage value at the time of estimating the fuel cell lifetime.

In normal operation for a power demand of 45 kW at 1 operating hour and *V*(t) = 291 V, which represents the voltage at the time of estimating the fuel cell lifetime; according to the RUL equation[1] is 14593 hours and the EOL is thus 14594 hours. The simulated operating point is defined after 1000 operating hours. At a current of 136 A and *V*(t) set to 285 V, the RUL is equal to 11755 hours and the EOL is 12755 hours, which corresponds to an ageing

[1] RUL = $t_E - t_{cp}$, where $t_E$: defined end of life time and $t_{cp}$: Time at measured damage.

acceleration of 79.12% (computing time 0.0479 seconds). The degradation and recovery acceleration are estimated as:

$$\text{Ageing acceleration [\%]} = \frac{(T_e - T_{cp}) - (T_e - T_{cum})}{T_e - T_{cum}} \times 100 \quad (3)$$

$$\text{Recovering [\%]} = \frac{(T_e - T_{cp}) - (T_e - T_{cum})}{T_e - T_{cp}} \times 100 \quad (4)$$

Where:

$T_e$: end of lifetime,

$T_{cp}$: time at the damage measurement,

$T_{cum}$: cumulated operating time.

### 3.1.2 Ancillaries diagnosis (PART II)

The online monitoring of the ancillaries can detect critical behaviors or defects in one of them. Thanks to the available validation data @VDL, the cooling strategy and the behavior of the air compressor have been studied and allowed developing the monitoring strategy.

#### *3.1.2.1 Compressor rotational speed monitoring*

Compressor performance is defined by so-called compressor map (Figure 10). The map illustrates the pressure ratio evolution VS the gas flow rate for different rotational speeds. Two limits can be observed in the map, the surge and choc limits, which are defined by the manufacturer. The surge limit is characterized by a low flow rate for a high pressure ratio. When this limit is exceeded, the gas flow is reversed and would severely damages the compressor. The chock limit is characterized by a high flow rate and a low pressure ratio, if this limit is exceeded, strong vibrations occur and also severely damage the compressor.

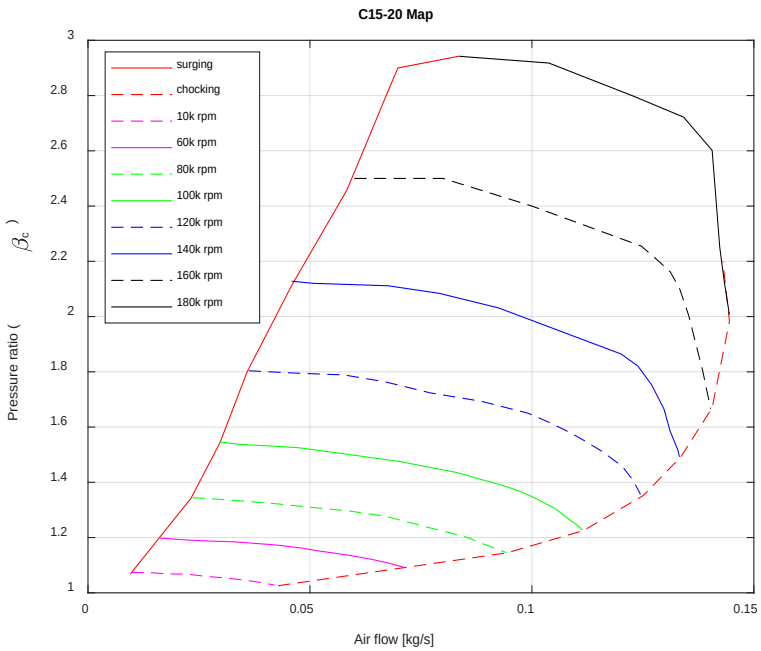


*Figure 10: Compressor map.*

At 136 A, the rotational speed of the compressor is 7667 rpm (Figure 11). Based on that, an upper and lower safety margin of 20% and 15%, respectively, are defined. If the rotational speed at a given current exceeds the upper margin, a risk of increasing the stress conditions would be observed. Moreover, if the rotational speed is lower than the lower margin, the compressor is underworking and presents a risk of substoichiometry for the fuel cell stack.

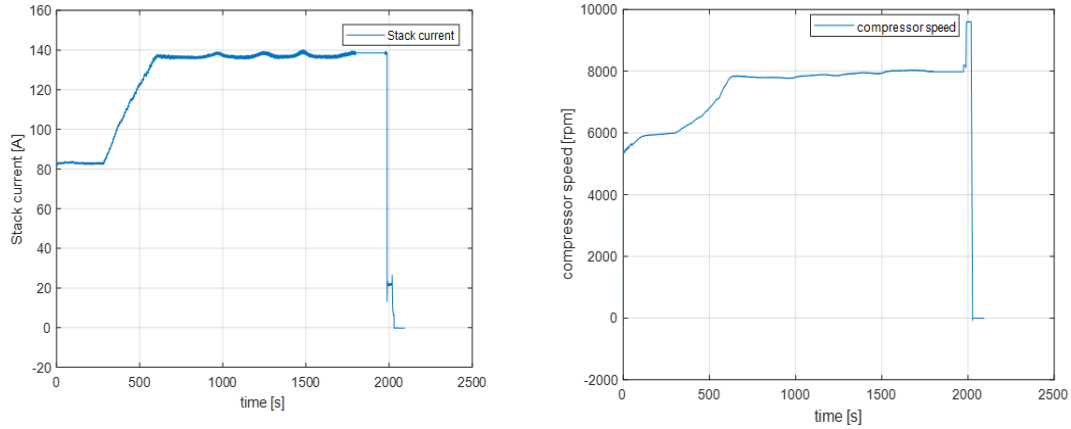


*Figure 11: Stack current and compressor rotational operating speed vs. operating time; data measured at VDL.*

### 3.1.2.2 Flow rate monitoring

For a current of 136 A, the surge and choc (defined in the previous section) flow rates are determined and they are equal to 86.07 and 343.24 kg/h (from the compressor map, Figure 10) respectively. For a given current, the maximum and minimum flow rates are defined. If a flow rate, defined here as 5%, is smaller than the limit surge flow rate, surge phenomenon can occur and affects the compressor. If a flow rate, defined as 5% of its maximum, is greater than the choc limit then compressor choc can occur and would damage it.

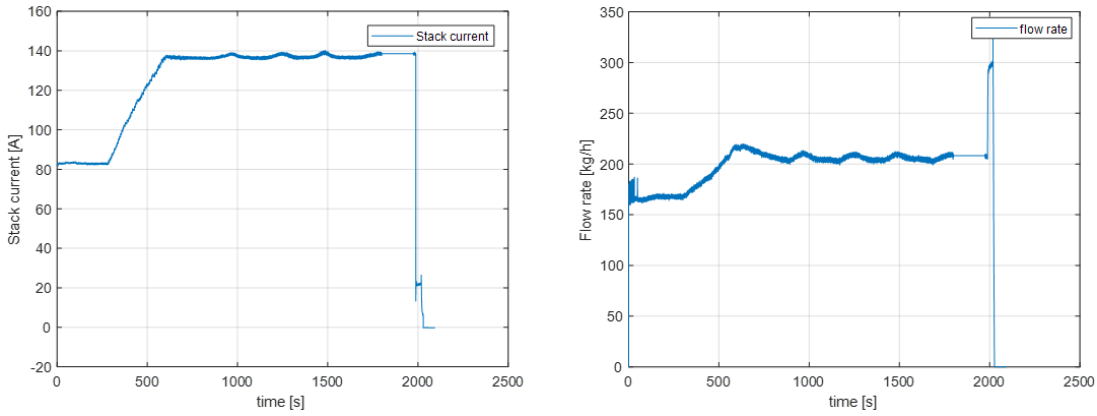


*Figure 12: Stack current / Air mass flow vs. operating time measured; data measured at VDL.*

### 3.1.2.3 Pump monitoring

The cooling is essentially provided by the fan. When the fan is saturated, the pump starts and does not exceed a ratio of 60% of its working range. Based on that, for a given current the maximum pump working ratio is determined and if it exceeds 60%, the pump is in overload. In the case when it exceeds the value of 75%, there is therefore a problem in the cooling circuit and the load has to be reduced or the system has to be stopped.

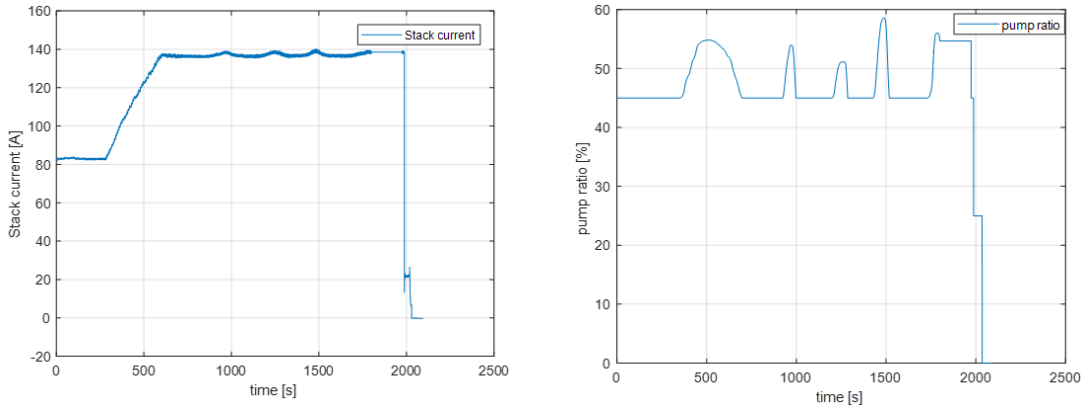


*Figure 13: Stack current and pump working ratio vs. operating time.*

### 3.1.2.4 Fan monitoring

As previously mentioned, cooling is provided by the fan. So, if the fan's operating ratio is less than 4.5%, it does not work and overheating may occur.

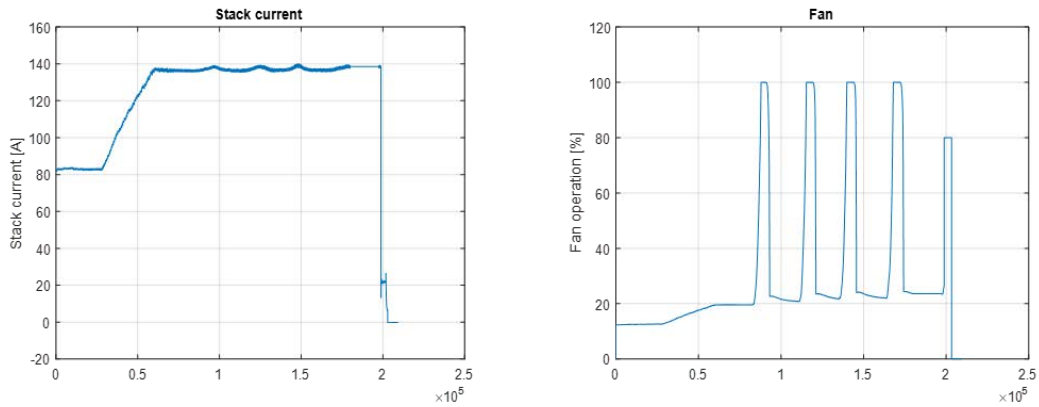


*Figure 14: Stack current and fan working ratio vs. operating time.*

# 4 Conclusions

The last part of the project aims to develop an algorithm to predict the fuel cell system lifetime reliably and efficiently. An ageing model of the fuel cell system has been developed using Matlab/Simulink, which allowed to develop the code for online implementation. Fuel cell parameters have been, firstly, identified to calibrate the model on the tested fuel cell @VDL. Secondly, ageing laws of these parameters have been developed according to the available data and used to predict the fuel cell degradation and therefore estimate the RUL of the fuel cell stack. Due to the lack of the available data in terms of operating hours, an operating point has been simulated for 1000 operating hours, at a current of 136 A and a voltage of 285 V in order to verify the model. The last part of the deliverable aimed to the online monitoring of the ancillaries to detect critical operating conditions that can damage the fuel cell stack and reduce its lifetime. Using the available data, working limits of the air supply device (compressor in terms of flow rate and operating speed) and the cooling system (fan and the pump) have been identified. These working limits were chosen for the maximum current achieved, according to the available data.